AL UMMA CENTER OF THE SC VALLEY

COMMERCIAL LANDSCAPE IMPROVEMENT PLANS

VICINITY MAP (N.T.S.)

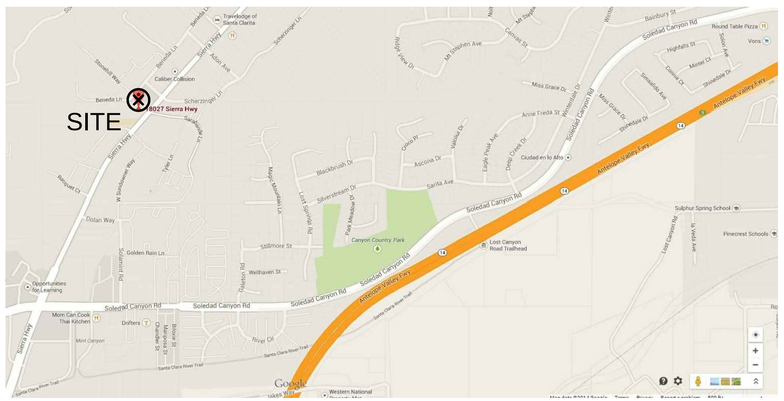

GENERAL LANDSCAPE NOTES

1. CONTRACTOR SHALL INSTALL ALL IMPROVEMENTS IN ACCORDANCE WITH THE **OWNER'S** REQUIREMENTS. IN CASE OF DISCREPANCY BETWEEN THESE PLANS AND THE **OWNER'S** REQUIREMENTS, THE MOST STRINGENT REQUIREMENT WILL APPLY.
2. CONTRACTOR SHALL VISIT THE SITE AND VERIFY ALL CONDITIONS PRIOR TO SUBMITTING A PROPOSAL OF COST FOR CONSTRUCTION.
3. CONTRACTOR SHALL READ THESE PLANS AND NOTES COMPLETELY AND BRING ANY DISCREPANCIES TO THE ATTENTION OF THE LANDSCAPE ARCHITECT IMMEDIATELY UPON DISCOVERY & PRIOR TO THE COMMENCEMENT OF ANY FURTHER WORK.
4. EXTRA WORK TO BE APPROVED IN WRITING BY THE **OWNER** PRIOR TO COMMENCEMENT OF WORK.
5. IT IS THE RESPONSIBILITY OF THE SUB-CONTRACTORS TO FAMILIARIZE THEMSELVES WITH ALL GRADE DIFFERENCES, LOCATION OF WALLS, UTILITIES, SEWERS, WATER LINES, ETC. COORDINATE WORK WITH OTHER SUB-CONTRACTORS FOR THE LOCATION AND INSTALLATION OF PIPE SLEEVES UNDER PAVING, ELECTRICAL CONNECTIONS, WATER HOOK-UPS, ETC.
6. ALL REQUIREMENTS OF THE UNIFORM BUILDING CODE SHALL APPLY TO THE WORK SPECIFIED HEREIN UNLESS OTHERWISE MODIFIED BY THESE DOCUMENTS.
7. CONTRACTOR SHALL OBTAIN ALL PERMITS REQUIRED TO COMPLETE THE WORK SPECIFIED.
8. CONTRACTOR TO NOTIFY UNDERGROUND SERVICE ALERT AT 811 48 HOURS PRIOR TO ANY EXCAVATION.
9. CONTRACTOR SHALL NOTIFY THE **OWNER** 48 HOURS PRIOR TO STARTING CONSTRUCTION.
10. CONTRACTOR TO COORDINATE A PRE-CONSTRUCTION MEETING ON SITE 48 HOURS PRIOR TO START OF CONSTRUCTION. NOTIFY **OWNER, OWNER'S REPRESENTATIVE,** AND ALL SUB-CONTRACTORS.
11. CONTRACTOR TO SUBMIT REQUESTS FOR MEETINGS, OBSERVATIONS, AND APPROVALS BY THE LANDSCAPE ARCHITECT AT LEAST 48 HOURS PRIOR TO THE DATE AND TIME PROPOSED.
12. OBTAIN THE **OWNER'S INSPECTOR'S** APPROVAL OF WORK IN PROGRESS AT VARIOUS TIMES DURING CONSTRUCTION. THE FOLLOWING REVIEWS/MEETINGS ARE MANDATORY. PROVIDE 48 HOURS NOTICE FOR EACH REQUESTED VISIT.

* PRE-JOB CONFERENCE
* CONSTRUCTION STAKING
* MAIN LINE PRESSURE TEST AND TRENCH DEPTHS PRIOR TO BACKFILL OF TRENCHES
* COVERAGE TEST UPON COMPLETION OF SPRINKLER INSTALLATION
* PLANT MATERIAL LOCATION REVIEW
* PLANT MATERIAL APPEARANCE AND QUALITY REVIEW
* FINAL WALK THROUGH (AT COMPLETION OF PLANTING INSTALLATION)
* FINAL WALK THROUGH (AT COMPLETION OF MAINTENANCE PERIOD)

DIRECT ANY QUESTIONS REGARDING THESE PLANS TO :

Charles H. STRAWTER Design Inc.
566 W. LANCASTER BLVD., STE 20
LANCASTER CA, 93534

office: (661)295-4631 | fax: (661)244-4911 |
e-mail: charles@chstrawterdesign.com
www.chstrawterdesign.com

LANDSCAPE ARCHITECT'S NOTICE TO CONTRACTORS

The existence and location of any underground utility pipes or structures shown on these plans were obtained by a search of the available records. To the best of our knowledge there are no existing utilities except those shown on these plans. The contractor is required to take due precautionary measures to protect the utility lines shown and any other lines not of record or not shown on this drawing. Prior to excavation the contractor shall call underground service alert, toll free, at 1-800-422-4133 to verify the location of underground utilities.

_____ _____ _____
Date

STATEMENT OF RESPONSIBILITY

The landscape architect signing these plans is responsible for assuring the accuracy and acceptability of the work hereon. In the event of discrepancies arising during construction, the landscape architect shall be responsible for determining an acceptable solution determining and revising the plans for approval by the City.

THE LOCATIONS OF UTILITIES SHOWN ARE APPROXIMATE.
BEFORE STARTING EXCAVATION, THE CONTRACTOR MUST CONTACT:
UNDERGROUND SERVICE ALERT
1-800-422-4133

SHEET INDEX

#	SHEET	CONTENTS
1	LT-001	TITLE SHEET
2	LT-002	WATER EFFICIENCY NOTES
3	LI-101	LANDSCAPE IRRIGATION PLAN
4	LI-201	LANDSCAPE IRRIGATION DETAILS
5	LI-202	LANDSCAPE IRRIGATION DETAILS
6	LP-101	LANDSCAPE PLANTING PLAN
7	LP-201	LANDSCAPE PLANTING DETAILS
8	LF-101	LANDSCAPE FUEL MODIFICATION PLANS

REFER TO ENGINEER'S PLANS, DETAILS AND SPECIFICATIONS FOR ALL GRADING AND SITE DOCUMENTATION (EXISTING AND PROPOSED CONDITIONS).

CONTACTS

LANDSCAPE ARCHITECT
CHARLES H. STRAWTER DESIGN INC.
Charles H. Strawter, Principal-Landscape Architect
Phone: (661)295-4631
Fax: (661)244-4911
28005 Smyth Drive, Suite 175
Valencia, CA 91355
E-MAIL: Charles@chstrawterdesign.com

Engineer
Hanbali & Associates
514 Commerce Ave #C Palmdale, CA 93551
OFFICE: (661) 266-0421

Property Owner
Al Umma Center of Santa Clarita Valley,
Contact: Majub Elarabi
18027 Sierra Hwy, Santa Clarita, CA 91351
Tel. (661) 219-3820

DIAL BEFORE YOU DIG
1-800-227-2600
DIGALERT
PLAY IT SAFE. DIAL BEFORE YOU DIG!
AT LEAST TWO WORKING DAYS PRIOR TO EXCAVATING
SERVING NINE SOUTHERN CALIFORNIA COUNTIES

CITY APPROVAL

SIGNATURE _____ DATE _____

REVISIONS	BY
-	

CHARLES H STRAWTER DESIGN INC.
Landscape Architecture & Urban Design Consulting
566 W. Lancaster Blvd., Ste 20
Lancaster, CA 93534
RLA | BSA
charles@chstrawterdesign.com
Ph: 661-295-4631 | Fax: 661-244-4911
RLA Licensed Landscape Architect
CA Registered Prof. Landscape Arch. #5134

SUBMITTAL: AGENCY SUBMITTAL

PROJECT: COMMERCIAL ADDITION
LANDSCAPE & IRRIGATION PLANS

SHEET TITLE: TITLE SHEET

CLIENT: Al Umma Center of the SC Valley
18027 Sierra Hwy, Santa Clarita, CA 91351

CONTACT: Majub Elarabi, Tel. (661) 219-3820

LICENSED LANDSCAPE ARCHITECT
CHARLES H. STRAWTER
LICENSE
6/30/2016
Renewal Date
01/01/2016
Date
STATE OF CALIFORNIA

CLARB CERTIFIED LANDSCAPE ARCHITECT

JOB NO.	CSD1184-14
DATE:	01-30-2015
SCALE:	PER PLAN
DRAWN:	CHS
SHEET:	LT-001

01 OF 08 SHEETS

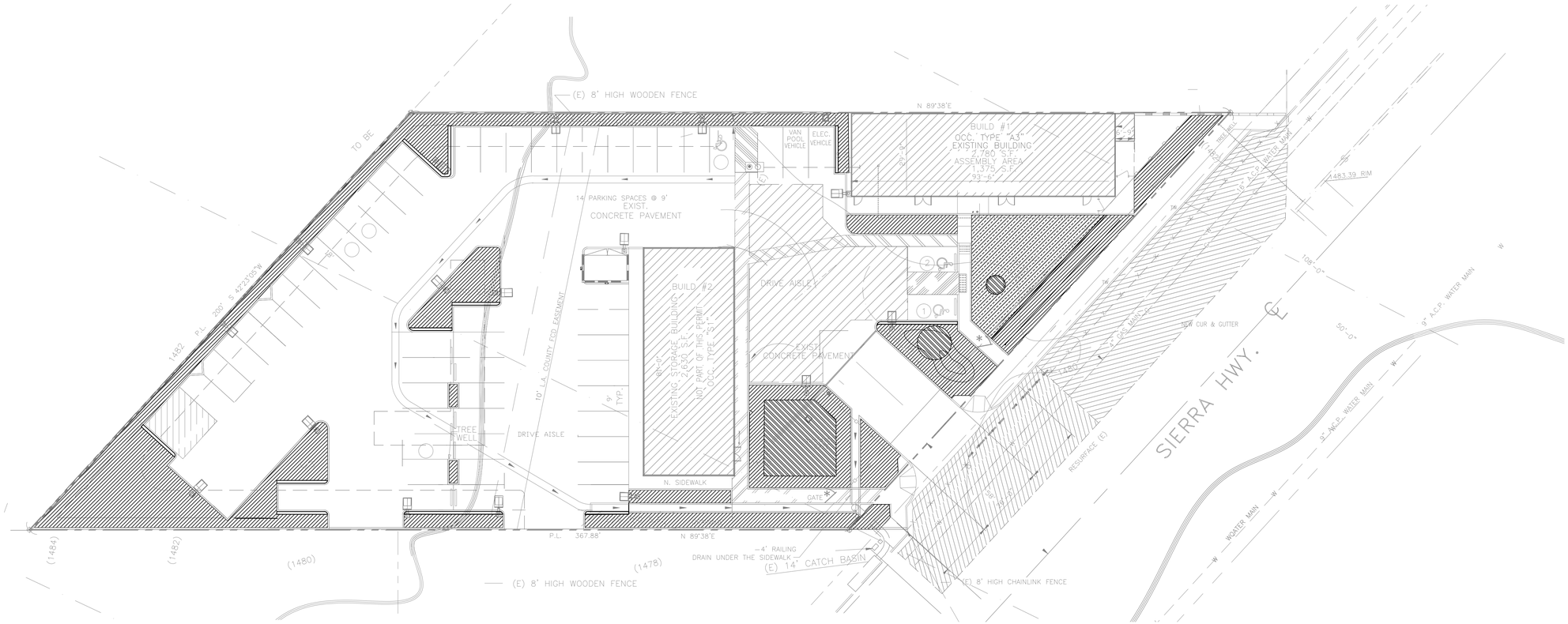

HYDROZONES

- HYDROZONE 1 - LOW WATER USE TREES, SHRUBS AND ORNAMENTAL GRASS, BUBBLERS (7175 square ft.)
- HYDROZONE 2 - MODERATE WATER USE TREES, BUBBLERS (808 square ft.)
- HYDROZONE 3 - HIGH WATER USE, TURF, DRIP (1119 square ft.)

TOTAL LANDSCAPE: 9,102 S.F.

DIAL BEFORE YOU DIG
1-800-227-2600
DIGALERT
PLAY IT SAFE. DIAL BEFORE YOU DIG!
AT LEAST TWO WORKING DAYS PRIOR TO EXCAVATING
SERVING NINE SOUTHERN CALIFORNIA COUNTIES

SCALE: 1"=20'-0"
0 10' 20' 40' 60' 80' FEET

Estimated Total Water Use
Equation:
ETWU = (ET_0) x (0.62) x [(PF x HA/IE) + SLA]

Enter values in Pale Blue Cells
Tan Cells Show Results
Messages and Warnings

Enter Irrigation Efficiency (equal to or greater than 0.71)	0.85
Irrigation Efficiency Default Value	0.71

Plant Water Use Type	Plant Factor
Low	0 - 0.3
Medium	0.4 - 0.6
High	0.7 - 1.0
SLA	1.00

Hydrozone	Plant Water Use Type (s) (low, medium, high)	Plant Factor (PF)	Hydrozone Area (HA) (ft^2)	PF x HA (ft^2)
1	LOW	0.30	7,175	2,153
2	MODERATE	0.50	808	404
3	HIGH	0.80	1,119	895
				0
				0
				0
				0
				0
				0
				0
				0
				0
				0
				0
				0
				3,452
	SLA	1	0	0
		Sum	9,102	

Results

MAWA =	242,941	ETWU=	154,839	Gallons	ETWU complies with MAWA
			20,699	Cubic Feet	
			207	HCF	
			0.48	Acre-feet	
			0.15	Millions of Gallons	

REVISIONS	BY
-	

CHARLES H STRAWTER DESIGN INC.
Landscape Architecture & Urban Design Consulting
Post Office Box 1162, Lancaster, CA 93584
charlesstrawterdesign@gmail.com
Ph. 661-295-4031 Fax. 661-284-4911
Cell. Charles H. Strawter 661-948-8431
CA Registered Prof. Landscape Arch. #3134
RLA I ISA

SUBMITTAL: AGENCY SUBMITTAL

PROJECT: COMMERCIAL ADDITION
LANDSCAPE & IRRIGATION PLANS

SHEET TITLE: GENERAL WATER EFFICIENCY NOTES

CLIENT: Al Umma Center of the SC Valley
18027 Sierra Hwy, Santa Clarita, CA 91351

CONTACT: Majub Elarabi, Tel. (661) 219-3820

LICENSED LANDSCAPE ARCHITECT
CHARLES H. STRAWTER JR.
Signature
6/30/2016
Renewal Date
01/11/2016
Date
STATE OF CALIFORNIA

CLARB CERTIFIED LANDSCAPE ARCHITECT

JOB NO.	CSD1184-14
DATE:	02-17-2015
SCALE:	PER PLAN
DRAWN:	CHS
SHEET:	LT-002

02 OF 08 SHEETS

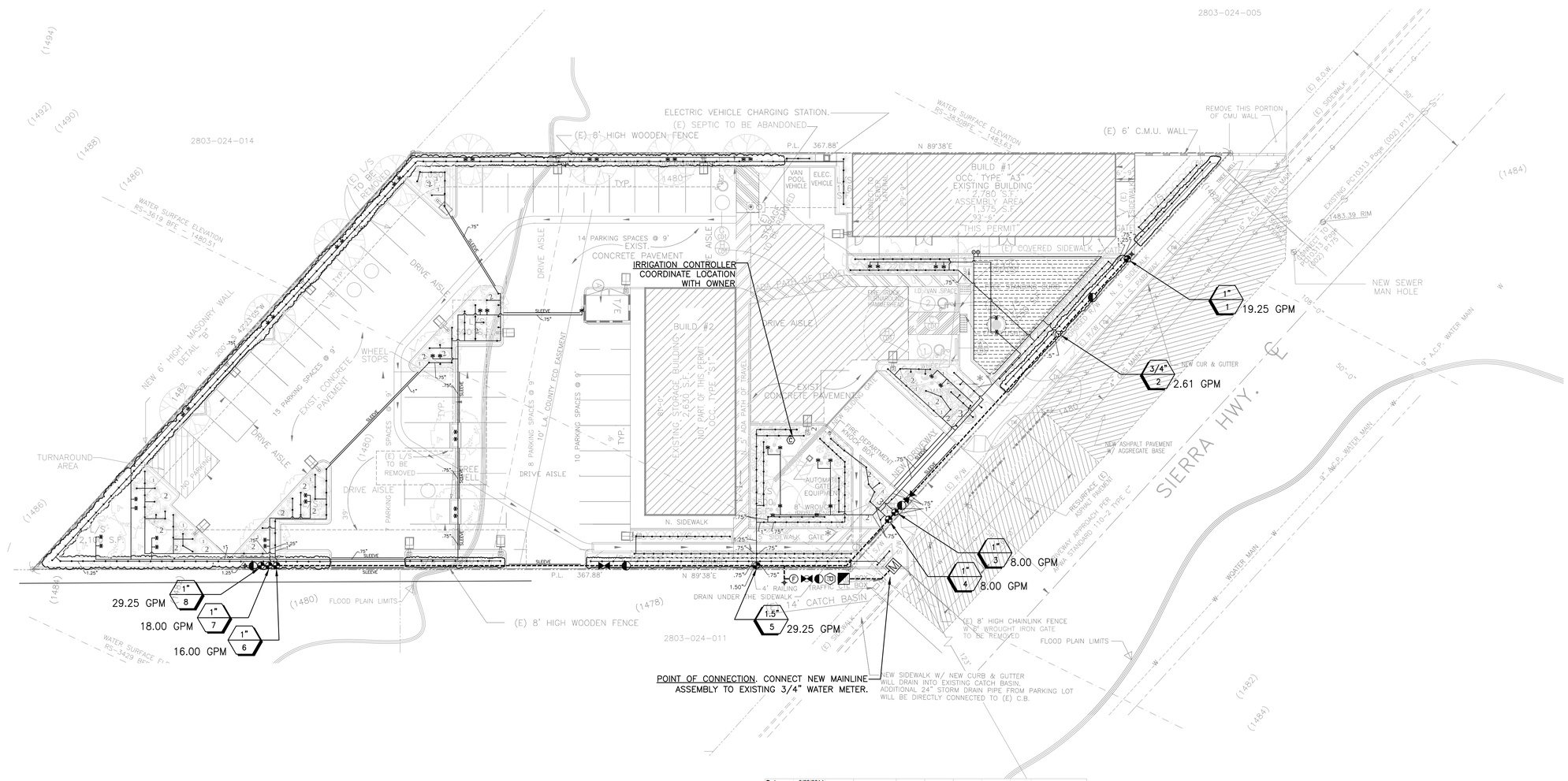

Date: 8/22/2014

POC DESIGNATION: EXISTING WATER METER, SE CORNER OF PROPERTY
NAME OF WATER PURVEYOR: Santa Clarita Water Division
CONTACT PERSON: Estella Valderrama - (661) 964-3995
SIZE OF WATER METER: 3/4"

STATIC WATER PRESSURE: 125 - 130 PSI

DESIGN PRESSURE: 20 PSI MIN. - 90 PSI MAX

DESIGNED HIGHEST GPM FLOW: 50

HIGHEST SYSTEM PRESSURE LOSS CALCULATION

CONTGROLLER/ STA: 8 **P.O.C. ELEV:** 1479
GPM: 29.25 **PSI @ P.O.C:** 125
Pressure needed for farthest bubbler at worst hydraulic condition: **20** psi

	Qty	Unit	pl/unit	psi loss	note
Pressure Regulator	1	ea	2.5	2.5	
Backflow Device	1	ea	12	12	
1-1/2" Brass Globe Valve	1	ea	0.45	0.45	
1-1/4" Bronze Ball Valve	1	ea	0.1	0.10	
1.5" Irrigation Control Valve	1	ea	3.5	3.50	
Pressure loss through Sch-40 lateral line 1/2"	63	Lf	0.0558	3.5154	
Pressure loss through Sch-40 lateral line 3/4"	51	Lf	0.0512	2.6112	
Pressure loss through Sch-40 lateral line 1"	82	Lf	0.0335	2.747	
Pressure loss through Sch-40 lateral line 1 1/4"	168	Lf	0.0271	4.5528	
Pressure loss through Sch-40 lateral line 1 1/2"	65	Lf	0.0234	1.521	
Pressure loss through Sch-40 main line 2"	230	Lf	0.0026	0.598	
Elevation change	1	Lf	0.433	0.43	
subtotal				**34.53**	
10% fitting loss				3.45	
Total Pressure Loss				**37.98**	

Summary:
REQUIRED SYSTEM MINIMUM PRESSURE: **57.98** psi
AVAILABLE STATIC PRESSURE AT POC: **125** psi

RESIDUAL PRESSURE: **-67.02** psi
ADJUST PRESSURE REGULATOR AT P.O.C. TO: **72.48** psi

IRRIGATION LEGEND

MAINLINE EQUIPMENT

DESCRIPTION	MODEL#	SYM.	DETAIL	NOTES
"RAINBIRD" 4 STATION IRRIGATION CONTROLLER	ESP-SM14	C	IF	COORDINATE THE LOCATION OF THE NEW WALL MOUNTED CONTROLLER W/ OWNER
"RAINBIRD" NORMALLY CLOSED 1" MASTER VALVE	100-GB-R-PRS-D		II	BRASS AUTOMATIC GLOBE VALVE (COMMERCIAL GRADE)
"RAINBIRD" AUTOMATIC CONTROL VALVE	XXX-PESB		ID	SIZE PER PLAN
"RAINBIRD" VALVE BOX	VB-STD		HJ,IJ,IP	
"NIBCO" 2" BRONZE BALL VALVE	T-585-70-66-ST		IL	250 PSI SWP, 2-PIECE BRONZE BODY, FULL PORT, SS STEM, SS BALL, THREADED CONNECTION
WILKINS" PRESSURE REGULATOR	70-DU		IE	--
EXISTING WATER METER				
"RAINBIRD" 3/4" QUICK COUPLER VALVE	33-QLRC		H	BRASS, 125 PSI PRESSURE RATING, LOCKING VINYL CAP
"FEBCO" BACKFLOW PREVENTER	825 YA		IE	REDUCED PRESSURE PRINCIPLE BACKFLOW PREVENTER, BRONZE "Y" STRAINER W/ MIN. 30 MESH SCREEN. BACK FLOW DEVICE SHALL BE WRAPPED /WINTERIZED.
ELECTRICAL PULL BOX			--	

DISTRIBUTION SYSTEM COMPONENTS

DESCRIPTION	MODEL#	SYM.	DETAIL	PRESSURE	NOTES
"RAINBIRD" PC FULL-CIRCLE BUBBLERS	1401		ID	20-90 PSI	0.25 GPM | INSTALL ON SCH.80 RISER PER DETAIL
"RAINBIRD" RWS ROOT WATERING SERIES	RWS-M-B-1402-50CK		IC	20-90 PSI	0.50 GPM

IRRIGATION PIPE

DESCRIPTION	SYM.	NOTES	DETAIL
SLEEVING SCH. 40 P.V.C.	--------	TWICE LINE SIZE (MIN.)	IA, IM
PRESSURE LINE SCH 40 P.V.C.	— — — —	2"	IA, IM
NON-PRESSURE LINE SCH. 40 P.V.C.	———	SEE CHART FOR SIZE	IA, IM

LEGEND NOTES

1) FOR FLOWS BELOW 10 GPM, RAINBIRD RECOMMENDS THE FLOW CONTROL SYSTEM BE TURNED DOWN TWO FULL TURNS FROM THE FULLY OPEN POSITION. SIZE / MAX. GPM

SUBSURFACE DRIP LEGEND

"RAINBIRD" CONTROL ZONE KIT W/ PR FILTER XCZ-075PRF			IG
"RAINBIRD" DRIP SYSTEM OPERATION INDICATOR			
"RAINBIRD" MANUAL FLUSH VALVE			IJ
NON-PRESSURE 1" SCH. 40 PVC HEADER	—·—·—·—		IA, IM
"RAINBIRD" XFS-09-18-500 (MAX. SINGLE LATERAL LENGTH = 294 LF @ 20 PSI)	— — — —	TECHLINE CV DRIPPER FLOW: 0.26 GPH, DRIPPER INTERVAL: 18", FLOW PER 100 LF: .29 GPM LATERAL ROW SPACING: 18", BURRY EVENLY 4"-6" DEEP APPLICATION RATE: 0.19 IN/HR. TO APPLY 'X' OF WATER: 80 MIN., COVERS 900 S.F.	IK

IRRIGATION PIPE SIZING CHART
SCH. 40 PVC (GPM @ 5' FT/SEC)

PIPE SIZE	GPM
1/2"	0-4 GPM
3/4"	7 GPM
1"	12 GPM
1-1/4"	22 GPM
1-1/2"	30 GPM
2"	50 GPM

CONTRACTOR SHALL SIZE ALL LATERAL PIPE ACCORDING TO THIS SIZING LEGEND, UNLESS SUBSTITUTING FOR LARGER PIPE SIZES.

DIAL BEFORE YOU DIG
1-800-227-2600
DIGALERT
PLAY IT SAFE. DIAL BEFORE YOU DIG!
AT LEAST TWO WORKING DAYS PRIOR TO EXCAVATING
SERVING NINE SOUTHERN CALIFORNIA COUNTIES

SCALE: 1"=20'-0"
0 10' 20' 40' 60' 80' FEET

REVISIONS	BY
-	

CHARLES H STRAWTER DESIGN INC
Landscape Architecture & Urban Design Consulting
Post Office Box 1000, Lancaster, CA 93539
charlesstrawterdesign.com
Ph: 661-297-4631 Fax: 661-244-4911
Rick Gerard - Landscape Architect
CA Registered Prof. Landscape Arch. #3134
HLA | BSA

SUBMITTAL: AGENCY SUBMITTAL

PROJECT: COMMERCIAL ADDITION
LANDSCAPE & IRRIGATION PLANS

SHEET TITLE: LANDSCAPE IRRIGATION PLAN

CLIENT: Al Umma Center of the SC Valley
19027 Sierra Hwy, Santa Clarita, CA 91351
CONTACT: Majub Elarabi, Tel. (661) 219-3820

LICENSED LANDSCAPE ARCHITECT
CHARLES H. STRAWTER JR.
6/30/2016
Renewal Date
07/07/2016
Date
STATE OF CALIFORNIA

CLARB CERTIFIED LANDSCAPE ARCHITECT

JOB NO.	CSD1184-14
DATE:	01-30-2015
SCALE:	PER PLAN
DRAWN:	CHS
SHEET:	LI-101

03 OF 08 SHEETS

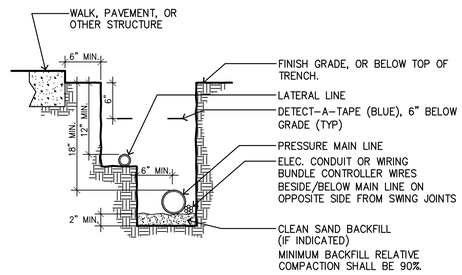

NOTES:
1. ALL PLASTIC PIPING TO BE SNAKED IN TRENCHES
2. BUNDLE & TAPE CONTROL WIRES AT 10' INTERVALS
3. TIE A LOOSE 20" LOOP IN WIRING AT CHANGE OF DIRECTION GREATER THAN 30'. UNTIE ALL LOOPS AFTER ALL CONNECTIONS HAVE BEEN MADE.
4. UNDER PAVED AREAS, ALL PRESSURE LINES & WIRES SHALL BE SLEEVED W/ SCH. 80 P.V.C. PIPE & SHALL BE 24" IN DEPTH (MIN.)
5. INSTALL ALL CONTROL WIRES ON UNDERSIDE OF MAINLINE PIPE
6. PIPE DEPTH FOR 2-1/2" AND LARGER SHALL BE 24" MINIMUM.
7. PIPE DEPTH FOR 2" AND SMALLER SHALL BE 18" MINIMUM.
8. PIPE DEPTH FOR ALL NON-PRESSURE LATERAL LINES SHALL BE 12" MINIMUM.

IA TRENCHING DETAIL

SCALE: N.T.S.
FILE: D_IRR002

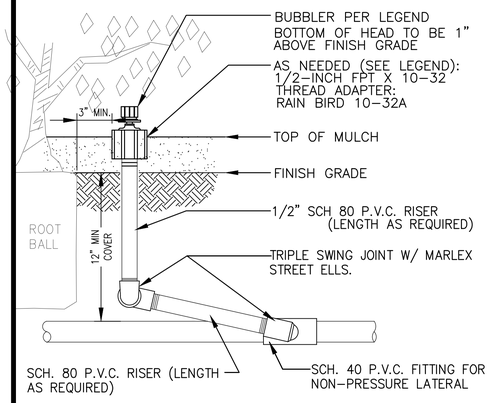

IB POINT SOURCE SHRUB BUBBLER

SCALE: NTS
FILE: D_IRR-DRIP01

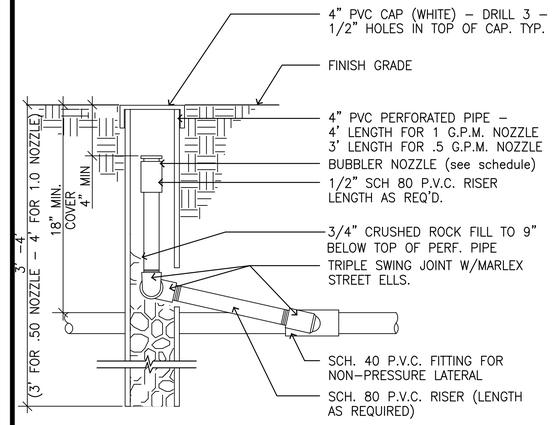

IC TREE BUBBLER

SCALE: NTS
FILE: D_IRR023

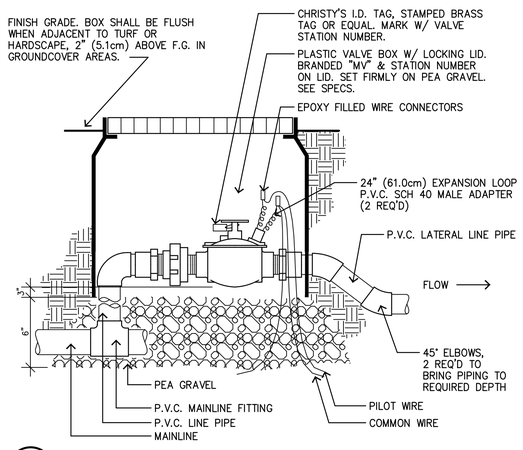

ID CONTROL VALVE

SCALE: N.T.S.
FILE: D_IRR004

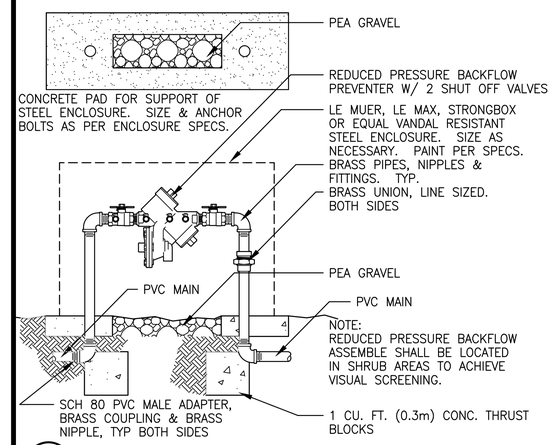

IE BACKFLOW PREVENTER

SCALE: N.T.S.
FILE: D_IRR006

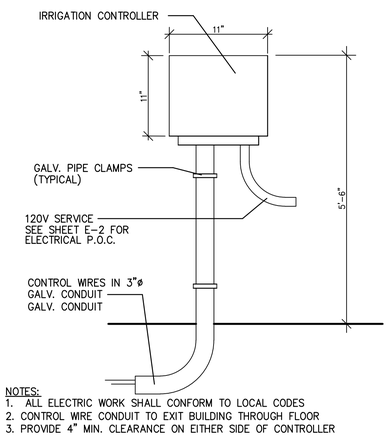

NOTES:
1. ALL ELECTRIC WORK SHALL CONFORM TO LOCAL CODES
2. CONTROL WIRE CONDUIT TO EXIT BUILDING THROUGH FLOOR
3. PROVIDE 4" MIN. CLEARANCE ON EITHER SIDE OF CONTROLLER

IF WALL MOUNT CONTROLLER

SCALE: N.T.S.
FILE: D_IRR008

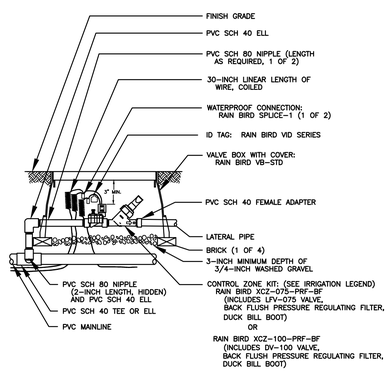

IG CONTROL ZONE KIT XCZ-075-PRF-BF

SCALE: N.T.S.
FILE: D_IRR-DRIP07

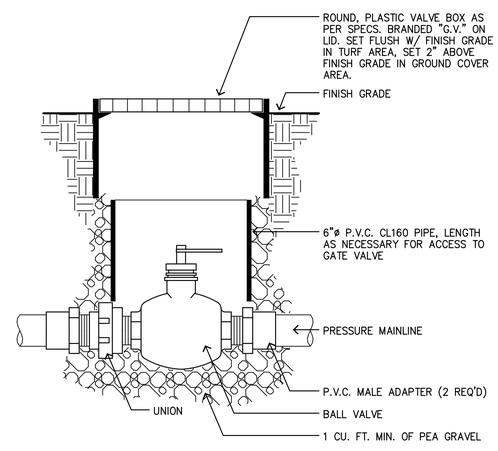

II BALL VALVE

SCALE: N.T.S.
FILE: D_IRR003

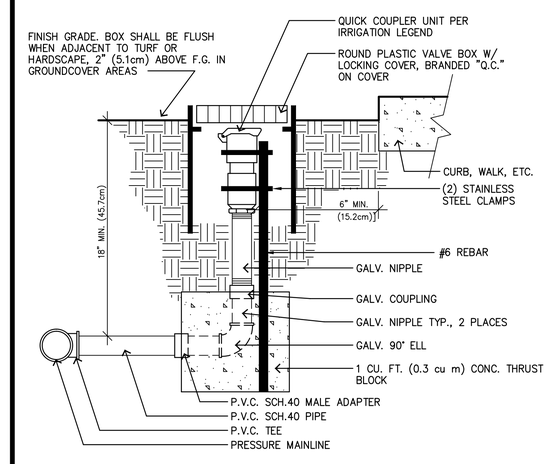

IH QUICK COUPLER

SCALE: N.T.S.
FILE: D_IRR005

REVISIONS	BY
-	

CHARLES H STRAWTER DESIGN INC
Landscape Architecture & Urban Design Consulting
Post Office Box 1000, Lancaster, CA 93539
BLA 1 BSA
charlesstrawterdesign.com
Ph. (661) 295-4631 Fax. (661) 244-4911
Cell (661) 948-7275 e-mail: cstrawter@earthlink.net
CA Registered Prof. Landscape Arch. #3134

SUBMITTAL: AGENCY SUBMITTAL

PROJECT: COMMERCIAL ADDITION
LANDSCAPE & IRRIGATION PLANS

SHEET TITLE: LANDSCAPE IRRIGATION DETAILS

CLIENT: Al Umma Center of the SC Valley
18027 Sierra Hwy, Santa Clarita, CA 91351

CONTACT: Majub Elarabi, Tel. (661) 219-3820

LICENSED LANDSCAPE ARCHITECT
CHARLES H. STRAWTER, ESQ.
6/30/2016
Signature
6/30/2016
Renewal Date
07/01/2016
Date
STATE OF CALIFORNIA

CLARB CERTIFIED LANDSCAPE ARCHITECT

JOB NO.	CSD1184-14
DATE:	01-30-2015
SCALE:	PER PLAN
DRAWN:	CHS
SHEET:	LI-201

1. FINISH GRADE/TURF
2. PVC DRIP MANIFOLD PIPE
3. PVC 1" X ¾" TRUE UNION BALL VALVE
4. EASY FIT MIPT X BARB ADAPTER: RAIN BIRD XFD–MA–075
5. LANDSCAPE DRIPLINE TUBING: RAIN BIRD XF SERIES BLANK TUBING
6. 12–INCH VALVE BOX WITH COVER: RAIN BIRD VB–STD
7. 3–INCH MINIMUM DEPTH OF 3/4–INCH WASHED GRAVEL
8. BRICK (1 OF 2)

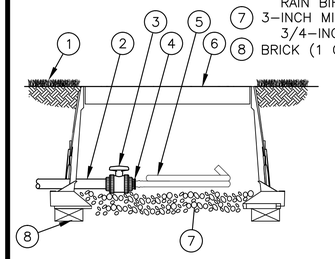

(IJ) XF–SDI SUB–SURFACE DRIPLINE FLUSH POINT W/BALL VALVE

SCALE: NTS
FILE: D_IRR–DRIP11

1. EASY FIT COMPRESSION TEE: RAIN BIRD MDCFTEE
2. LANDSCAPE DRIPLINE TUBING: RAIN BIRD XF–SDI SERIES DRIPLINE
3. EMITTER
4. TIE DOWN STAKE: RAIN BIRD TDS–050 WITH BEND (TYPICAL)
5. TURF/FINISH GRADE

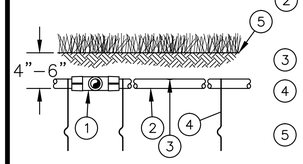

NOTES:
1. PLACE TIE DOWN STAKES EVERY THREE FEET IN SAND, FOUR FEET IN LOAM, AND FIVE FEET IN CLAY.
2. AT FITTINGS WHERE THERE IS A CHANGE OF DIRECTION SUCH AS TEES OR ELBOWS, USE TIE–DOWN STAKES ON EACH LEG OF THE CHANGE OF DIRECTION.
3. INSERTION PLOW AND TRENCHED INSTALLATIONS DO NOT REQUIRE TIE DOWN STAKES.

(IK) XF–SDI SUB–SURFACE DRIPLINE

SCALE: N.T.S.
FILE: D_IRR–DRIP09

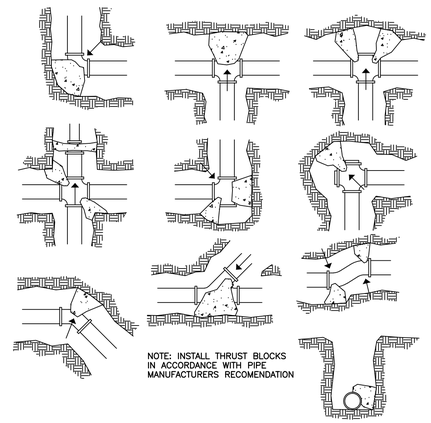

(IM) THRUST BLOCK

SCALE: NTS
FILE: D_IRR010.DWG

REVISIONS	BY
–	

CHARLES H STRAWTER DESIGN INC
Landscape Architecture & Urban Design Consulting
Post Office Box 1162, Lancaster, CA 93584
Lancaster, CA 93534

charles@strawterdesign.com
Ph. (661) 295-4631 Fax: (661) 244-4911
Web Site: www.strawterdesign.com
CA Registered Prof. Landscape Arch. #3134

HLA 1 ISA

SHEET TITLE: LANDSCAPE IRRIGATION DETAILS

SUBMITTAL: AGENCY SUBMITTAL

PROJECT: COMMERCIAL ADDITION
LANDSCAPE & IRRIGATION PLANS

CLIENT: Al Umma Center of the SC Valley
18027 Sierra Hwy, Santa Clarita, CA 91351

CONTACT: Majub Elarabi, Tel. (661) 219-3820

LICENSED LANDSCAPE ARCHITECT
CHARLES H. STRAWTER JR.
Signature
6/30/2016
Renewal Date
02/09/2016
Date
STATE OF CALIFORNIA

CLARB CERTIFIED LANDSCAPE ARCHITECT

JOB NO.	CSD1184-14
DATE:	01-30-2015
SCALE:	PER PLAN
DRAWN:	CHS
SHEET:	LI-202
	05 OF 08 SHEETS

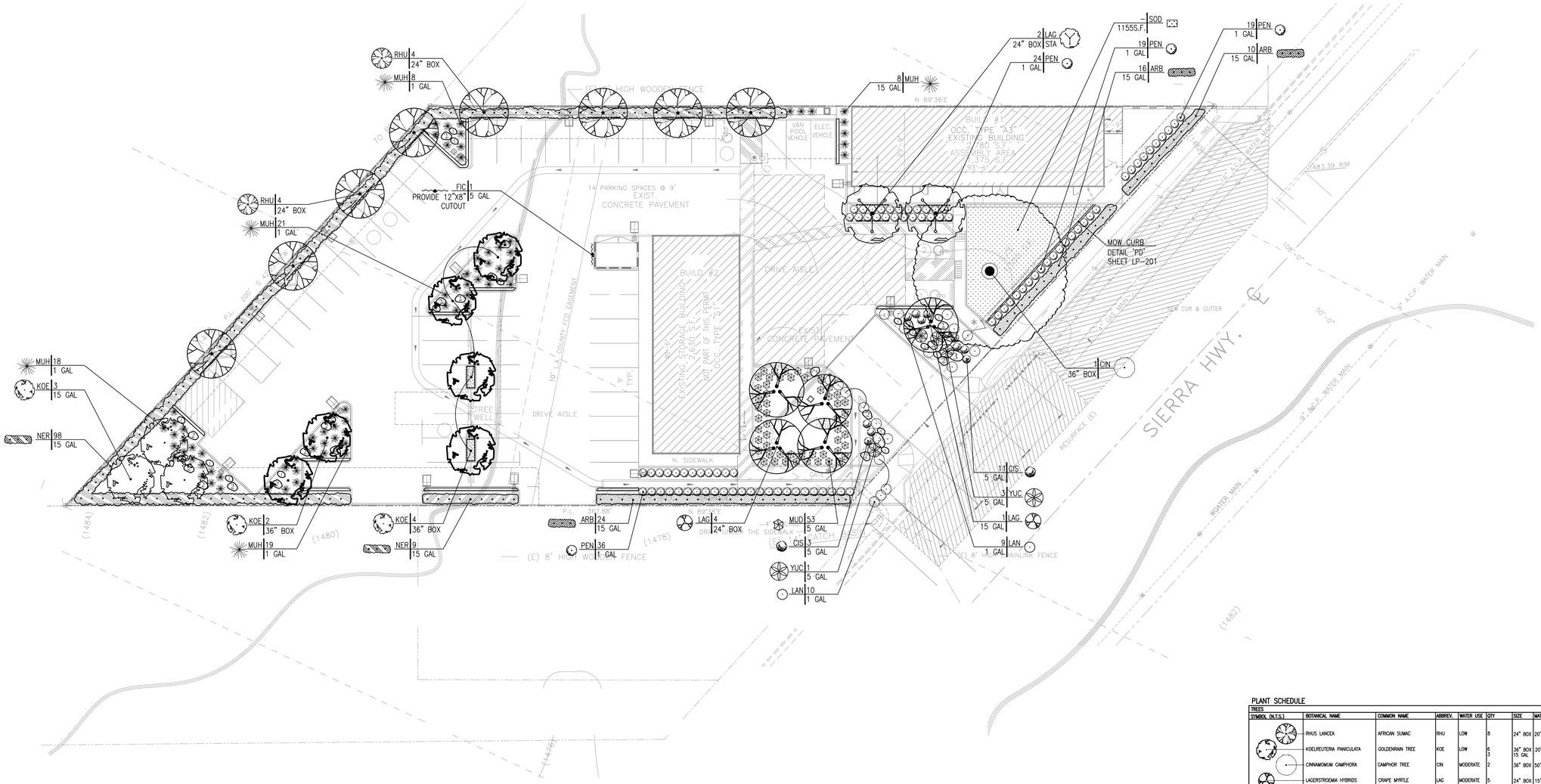

PLANT SCHEDULE

TREES

SYMBOL (N.T.S.)	BOTANICAL NAME	COMMON NAME	ABBREV.	WATER USE	QTY	SIZE	MATURE WIDTH	MATURE HEIGHT	REMARKS	DETAIL	FM ZONES
	RHUS LANCEA	AFRICAN SUMAC	RHU	LOW	8	24" BOX	20'	20'	STANDARD FORM	PA	A,B-15
	KOELREUTERIA PANICULATA	GOLDENRAIN TREE	KOE	LOW	6 3	36" BOX 15 GAL	20'	20'	STANDARD FORM	PA	B
	CINNAMOMUM CAMPHORA	CAMPHOR TREE	CIN	MODERATE	2	36" BOX	50'	50'	STANDARD FORM	PA	B-30
	LAGERSTROEMIA HYBRIDS 'NATCHEZ' MULTI	CRAPE MYRTLE	LAG	MODERATE	5	24" BOX	15'	25'	NATURAL FORM	PA	A,B
	LAGERSTROEMIA HYBRIDS 'NATCHEZ' STANDARD	CRAPE MYRTLE	LAG	MODERATE	2	24" BOX	15'	25'	STANDARD FORM	PA	A,B

SHRUBS | PERENNIALS

SYMBOL (N.T.S.)	BOTANICAL NAME	COMMON NAME	ABBREV.	WATER USE	QTY	SIZE	MATURE WIDTH	MATURE HEIGHT	REMARKS	DETAIL	FM ZONES
	NERIUM OLEANDER 'LITTLE RED'	DWARF RED OLEANDER	NER	LOW	109	5 GAL	5'	5'	PLANT 48" O.C.	PB	B
	ARBUTUS UNEDO 'COMPACTA'	DWARF STRAWBERRY TREE	ARB	LOW	50	5 GAL	5'	5'	PLANT 48" O.C.	PB	A, B-5
	MUHLENBERGIA CAPILLARIS	PINK MUHLY	MUH	LOW	71	1 GAL	3'	5'	PLANT 36" O.C.	PB	A,B-10
	PENNISETUM ALOPECUROIDES 'CASSIAN'	FOUNTAIN GRASS	PEN	LOW	98	1 GAL	3'	3'	PLANT 30" O.C.	PB	A,B-10
	MUHLENBERGIA DUBIA	PINE MUHLY GRASS	MUD	LOW	53	5 GAL	2'	2'	PLANT 24" O.C.	PB	A,B-10
	CISTUS SUNSET	SUNSET ROCKROSE	CIS	VERY LOW	14	1 GAL	3'	3'	PLANT 48" O.C.	PB	B
	YUCCA RECURVIFOLIA 'MARGARITAVILLE'	MARGARITAVILLE SOFT LEAF YUCCA	YUC	LOW	2	1 GAL	6'-10'	8'-10'	PLANT 48" O.C.	PB	B
	FICUS PUMILA	CREEPING FIG	FIC	MODERATE	1	5 GAL	TRAINED	TRAINED	PLANT 36" O.C.	PB	B-
	LANTANA SELLOWIANA 'MONNA'	WHITE LIGHTNIN LANTANA	LAN	LOW	19	1 GAL	3'-6'	8"-12"	PLANT 24" O.C.	PB	A,B- 10
	Marathon II Sod SEE PLANTING NOTES (SHT. LP-001)	TURF GRASS	SOD	HIGH	1155 S.F.	SOD	-	-	-	-	A,B

LANDSCAPE MATERIALS

SYMBOL (N.T.S.)

"HIGH DESERT" - NATURAL BOULDERS. BURY 1/3 BELOW GRADE. ARRANGE TO RESEMBLE ROCK OUTCROPS. SEE DETAIL 'PD', SHEET LP-201

(3) 5' X 3.5' DIA. BOULDER. QTY: 2 (2) 3' X 2' DIA. BOULDER. QTY: 20 (1) 2' X 1.5' DIA. BOULDER. QTY: 17

3" DECOMPOSED GRANITE BEDDING MATERIAL (TREE WELLS)

ROOT BARRIERS TO BE INSTALLED 12' LONG, 24" DEEP AT EDGE OF PAVING FOR ALL TREES PLANTED WITHIN 5' OF HARDSCAPE. 24" ROOT BARRIER SHALL BE HIGH DENSITY IMPACT PLASTIC AS AVAILABLE FROM "DEEP ROOT" VESPRO, INC. OR APPROVED EQUAL. SET TOP OF ROOT BARRIER 1/2" ABOVE FINISH GRADE OF SOIL.

PLANT SCHEDULE NOTES

1. APPLY A 2" THICK LAYER OF CEDAR MULCH (WALK ON) TO ALL SHRUB PLANTING AREAS.
2. ALL PLANT SUBSTITUTIONS MUST BE APPROVED BY LANDSCAPE ARCHITECT.
3. *WATER USE EVALUATION IS BASED ON WUCOLS IV REGION 4, SUNSET ZONE 18, CALIFORNIA CLIMATE ZONE 9
4. ROOT BARRIERS TO BE INSTALLED 12' LONG, 24" DEEP AT EDGE OF PAVING FOR ALL TREES PLANTED WITHIN 5' OF HARDSCAPE. 24" ROOT BARRIER SHALL BE HIGH DENSITY IMPACT PLASTIC AS AVAILABLE FROM "DEEP ROOT" VESPRO, INC. OR APPROVED EQUAL. SET TOP OF ROOT BARRIER 1/2" ABOVE FINISH GRADE OF SOIL. INSTALL PER MANUFACTURES RECOMMENDATIONS.

DIAL BEFORE YOU DIG
1-800-227-2600
DIGALERT
PLAY IT SAFE. DIAL BEFORE YOU DIG!
AT LEAST TWO WORKING DAYS PRIOR TO EXCAVATING
SERVING NINE SOUTHERN CALIFORNIA COUNTIES

SCALE: 1"=20'-0"
0 10' 20' 40' 60' 80' FEET

REVISIONS	BY
-	

CHARLES H STRAWTER DESIGN INC
Landscape Architecture & Urban Design Consulting
Post Office Box 1162
Lancaster, CA 93584
BLA 1 BSA
charlesstrawterdesign.com
Ph. 661-295-4631 Fax: 661-244-4911
Pro Member American Society of Landscape Architects
CA Registered Prof. Landscape Arch. #5134

SHEET TITLE: LANDSCAPE PLANTING PLAN

SUBMITTAL: AGENCY SUBMITTAL

PROJECT: COMMERCIAL ADDITION
LANDSCAPE & IRRIGATION PLANS

CLIENT: Al Umma Center of the SC Valley
19027 Sierra Hwy, Santa Clarita, CA 91351

CONTACT: Majjub Elarabi, Tel. (661) 219-3820

LICENSED LANDSCAPE ARCHITECT
CHARLES H. STRAWTER JR.
Signature
6/30/2016
Renewal Date
07/17/2015
Date
STATE OF CALIFORNIA

CLARB CERTIFIED LANDSCAPE ARCHITECT

JOB NO.	CSD1184-14
DATE:	02-17-2015
SCALE:	PER PLAN
DRAWN:	CHS
SHEET:	LP-101

06 OF 08 SHEETS

SOIL MANAGEMENT REPORT

WALLACE LABORATORIES, LLC
365 Coral Circle
El Segundo, CA 90245
phone (310) 615-0116 fax (310) 640-6863

January 29, 2015

Charles Strawter Design Inc., charles@chstrawterdesign.com
566 West Lancaster Blvd., Suite 20
Lancaster, CA 93534

RE: Al Umma Center of SCV, Majub Elarabi, Our ID No. 15-28S-10

Dear Charles,

The soil pH is moderately alkaline at 7.58. Limestone is present. It induces iron deficiency in acid-loving plants such as crape myrtle and possibly the camphor tree. Salinity is modestly high at 3.34 millimho/cm. Chloride is slightly elevated.

Nitrogen, potassium, copper, boron and magnesium are high. Boron is 0.85 part per million. Lantana is sensitive to boron over about 0.5 part per million. Phosphorus, iron and manganese are low. Gypsum is present. Total available sodium is modest. SAR (sodium adsorption ratio) is 0.8.

The texture is sandy loam. Based on the non-gravel fraction, it contains 55.9% sand, 34.8% silt and 9.2% clay. The gravel content is 1.3%.

Soil organic matter is low at 0.60% on a dry weight basis.

The estimated rate of water percolation based on Soil Water Characteristics version 6.02.74 model developed by Keith Saxton of the USDA is moderate at 1.37 inches per hour for normal soil compaction. The model is based on the soil texture, percent gravel and percent soil organic matter.

Recommendations

Loosen/cultivate/rip any dense or compacted soils.

General soil preparation on a square foot basis. Broadcast the following materials uniformly. The rates are per 1,000 square feet. Incorporate them homogeneously 6 inches deep. Remove clods, rocks, debris, foreign materials large 1 inch in diameter from the top 6 inches:

Triple superphosphate (0-45-0) – 4 pounds
Organic soil amendment - about 3 cubic yards, sufficient for 3% to 5% soil organic matter

Prepare planting pits at least twice as wide as the rootballs but not deeper than the rootball. Set the trees to position the top of rootball about one inch higher than finish grade. The root flare needs to be exposed and not buried.

For the preparation on a volume basis, homogeneously blend the following materials into excavated soil. Rates are expressed per cubic yard. Remove clods, rocks, debris, foreign materials large 1 inch in diameter:

Triple superphosphate (0-45-0) – 1/4 pound
Organic soil amendment - about 15% by volume, sufficient for 3% to 5% soil organic matter

Organic soil amendment:

1. Humus material shall have an acid-soluble ash content of no less than 6% and no more than 20%. Organic matter shall be at least 50% on a dry weight basis.
2. The pH of the material shall be between 6 and 7.5.
3. The salt content shall be less than 10 millimho/cm @ 25° C. on a saturated paste extract.
4. Boron content of the saturated extract shall be less than 1.0 part per million.
5. Silicon content (acid-insoluble ash) shall be less than 50%.
6. Calcium carbonate shall not be present if to be applied on alkaline soils.
7. Types of acceptable products are composts, manures, mushroom composts, straw, alfalfa, peat mosses etc. low in salts, low in heavy metals, free from weed seeds, free of pathogens and other deleterious materials.
8. Composted wood products are conditionally acceptable [stable humus must be present]. Wood based products are not acceptable which are based on red wood or cedar.
9. Sludge-based materials are not acceptable.
10. Carbon:nitrogen ratio is less than 25:1.
11. The compost shall be aerobic without malodorous presence of decomposition products.
12. The maximum particle size shall be 0.5 inch, 80% or more shall pass a No. 4 screen for soil amending.

Maximum total permissible pollutant concentrations in amendment in parts per million on a dry weight basis:

arsenic	20	copper	150	selenium	50
cadmium	15	lead	200	silver	10
chromium	300	mercury	10	vanadium	500
cobalt	50	molybdenum	20	zinc	300
		nickel	100		

Higher amounts of salinity or boron may be present if the soils are to be preleached to reduce the excess or if the plant species will tolerate the salinity and/or boron.

Irrigate deeply to help lower salinity and boron. Reduce boron to less than 0.5 part per million. Balance soil moisture with soil aeration.

For site maintenance, apply ammonium sulfate (21-0-0) at 5 pounds per 1,000 square feet about once per quarter. Monitor the site with periodic soil testing. Adjust the maintenance program as needed.

Correct iron deficiency as needed with Becker Underwood Sprint 138 Fe or other FeEDDHA chelated iron.

Sincerely,

Garn A. Wallace, Ph. D.
GAW:n

WALLACE LABS	SOILS REPORT	Print Date	Jan. 28, 2015	Receive Date	1/27/15
365 Coral Circle	Location	Al Umma Center of SCV, Majub Elarabi			
El Segundo, CA 90245	Requester	Charles Strawter, Charles H. Strawter Design			
(310) 615-0116	graphic interpretation: * very low, ** low, *** moderate				

ammonium bicarbonate/DTPA		* * * * high, * * * * * very high
extractable - mg/kg soil	Sample ID Number	15-28S-10
Interpretation of data	Sample Description	Soil Sample Received 01/27/2015
low medium high	elements	graphic
0 - 7 8-15 over 15	phosphorus	4.83 **
0-60 60 -120 121-180	potassium	654.73 *****
0 - 4 4 - 10 over 10	iron	2.12 *
0- 0.5 0.6- 1 over 1	manganese	0.45 **
0 - 1 1 - 1.5 over 1.5	zinc	1.12 ***
0- 0.2 0.3- 0.5 over 0.5	copper	1.13 ****
0- 0.2 0.2- 0.5 over 1	boron	0.85 ****
	calcium	351.76 ***
	magnesium	162.07 *****
	sodium	101.32 ***
	sulfur	157.71 ***
	molybdenum	0.06 ***
	nickel	0.17 *
The following trace	aluminum	n d *
elements may be toxic	arsenic	0.09 *
The degree of toxicity	barium	3.26 **
depends upon the pH of	cadmium	0.02 *
the soil, soil texture,	chromium	n d *
organic matter, and the	cobalt	0.03 *
concentrations of the	lead	1.46 **
individual elements as	lithium	0.33 *
well as to their interactions.	mercury	n d *
	selenium	n d *
The pH optimum depends	silver	n d *
upon soil organic	strontium	3.73 *
matter and clay content-	tin	n d *
for clay and loam soils:	vanadium	0.11 *
under 5.2 is too acidic		
6.5 to 7 is ideal	Saturation Extract	
over 9 is too alkaline	pH value	7.58 ****
The ECe is a measure of	ECe (milli-	3.34 ****
the soil salinity:	mhos/cm)	milleq/l
1-2 affects a few plants	calcium	485.7 24.3
2-4 affects some plants,	magnesium	59.1 4.9
> 4 affects many plants.	sodium	73.5 3.2
	potassium	65.0 1.7
	cation sum	34.0
problems over 150 ppm	chloride	212 6.0
good 20 - 30 ppm	nitrate as N	202 14.4
	phosphorus as P	0.2 0.0
toxic over 800	sulfate as S	229.0 14.3
	anion sum	34.7
toxic over 1 for many plants	boron as B	0.73 ***
increasing problems start at 4	SAR	0.8 *
est. gypsum requirement-lbs./1,000 square feet		17
calculated infiltration rate inches/hour		1.37
soil texture		sandy loam gravel > 2 mm
sand		55.9% 1.3%
silt		34.8%
clay		9.2%
lime (calcium carbonate)		yes
Total nitrogen		0.022%
Total organic carbon		0.301%
carbon:nitrogen ratio		13.5
organic matter based on carbon		0.60%
moisture content of soil		12.4%
half saturation percentage		18.6%

Elements are expressed as mg/kg dry soil or mg/l for saturation extract.
pH and ECe are measured in a saturation paste extract. nd means not detected.
Analytical data determined on soil fraction passing a 2 mm sieve.

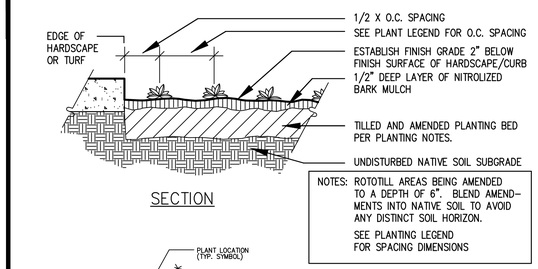

(PC) GROUNDCOVER PLANTING

SCALE: N.T.S.
FILE: D_PLA-GROUNDCOVER

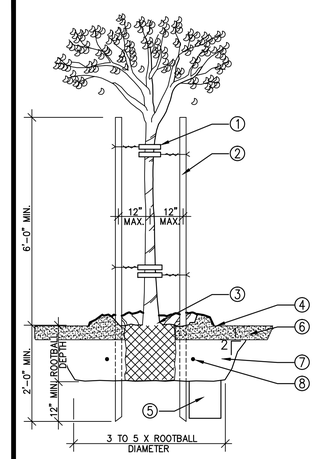

(PA) TREE STAKING

SCALE: N.T.S.
FILE: D_PLA-N-TREE

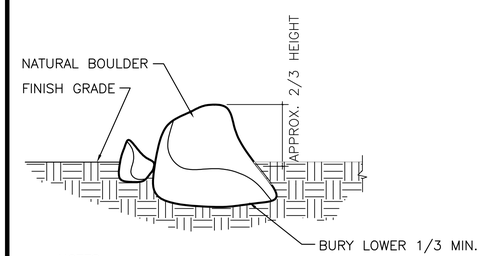

NOTES:

1. PLACE BOULDERS AS SHOWN ON PLAN
2. ALL BOULDERS TO BE A MINIMUM 15 INCHES HIGH WITH 9 INCHES ABOVE GROUND FOR CURBING.

(PD) ROCK OUTCROPPING

SCALE: 1/2"=1'-0"
FILE: D_SIT022

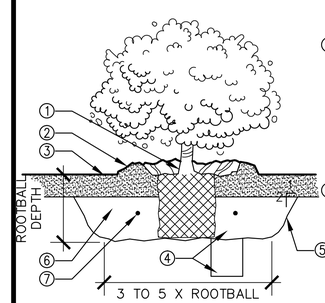

(PB) SHRUB PLANTING

SCALE: N.T.S.
FILE: D_PLA-N-SHRUB

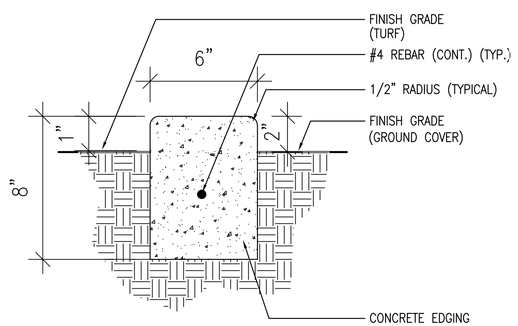

(PE) CONCRETE MOW STRIP

SCALE: 3"=1'-0"
FILE: D_PAV002

REVISIONS	BY
-	

CHARLES H STRAWTER DESIGN INC
Landscape Architecture & Urban Design Consulting
566 West Lancaster Blvd., Suite 20
Lancaster, CA 93534
charles@chstrawterdesign.com
Ph. 661-295-4631 Fax: 661-234-4911
Web Site: www.chstrawterdesign.com
CA Registered Prof. Landscape Arch. #3134
RLA I ISA

SUBMITTAL: AGENCY SUBMITTAL

PROJECT: COMMERCIAL ADDITION
LANDSCAPE & IRRIGATION PLANS

SHEET TITLE: LANDSCAPE PLANTING DETAILS

CLIENT: Al Umma Center of the SC Valley
19027 Sierra Hwy, Santa Clarita, CA 91351

CONTACT: Majub Elarabi, Tel. (661) 219-3820

LICENSED LANDSCAPE ARCHITECT
CHARLES H. STRAWTER JR.
3134
6/30/2016
Renewal Date
07/17/2015
Date
STATE OF CALIFORNIA

CLARB CERTIFIED LANDSCAPE ARCHITECT

JOB NO.	CSD1184-14
DATE:	02-17-2015
SCALE:	PER PLAN
DRAWN:	CHS
SHEET:	LP-201

07 OF 08 SHEETS

BANK STABILIZATION

THERE IS NO PROPOSED GRADING FOR THIS PROJECT.

PRIMARY EXISTING SOILS

THE NATIVE PLANT COMMUNITY ON THE SITE IS OAK WOODLAND AND CHAPARRAL. THIS COMMUNITY IS COMPRISED OF VEGETATION THAT GROWS IN COURSE, FAST DRAINING SOIL THAT HAS A NEUTRAL TO ALKALINE PH.

EXISTING VEGETATION

THE SPECIES COMPOSITION ON THE SITE HAS BEEN BEEN ALTERED BY A ORNAMENTAL LANDSCAPING AND DEVELOPMENT.

THERE ARE (5) FIVE EXISTING COAST LIVE OAK (QUERCUS AGRIFOLIA) TREES ON THE SITE. THE TREES ARE IN GOOD CONDITION AND WILL NOT BE IMPACTED BY CONSTRUCTION. THE ONLY OTHER NATIVE TREE ON THE SITE ARE (3) THREE MEXICAN ELDERBERRY (SAMBUCUS MEXICANA) TREES. ORNAMENTAL TREES INCLUDE (3) EUCALYPTUS TREES, (4) FOUR PINE TREES, (3) THREE CHINESE ELM TREES, (1) ONE CHERRY TREE, (1) ONE HOLLYWOOD JUNIPER TREE, AND (5) ASH TREES.

ASSESSMENT NOTES AND MAINTENANCE AGREEMENT FOR FUEL MODIFICATION PLAN #

Zone A — Setback Zone

- Extends 20 feet beyond the edge of any combustible structure, accessory structure, appendage or projection. Overhangs or other parts of the structure not accurately reflected on the plans may negate the approval of plant location on the approved plan.
- Irrigation by automatic or manual systems shall be provided to landscaping to maintain healthy vegetation and fire resistance.
- Landscaping and vegetation in this zone shall consist primarily of green lawns, ground covers not exceeding 6 inches in height, and adequately spaced shrubs. The overall characteristics of the landscape shall provide adequate defensible space in a fire environment.
- Plants in Zone A shall be inherently highly fire resistant and spaced appropriately. Species selection should be made referencing the Fuel Modification Plant List. Other species may be utilized subject to approval. Final or revised Plans submitted after 6 months from the initial submittal will have plants in all zones evaluated based on the most current Fuel Modification Plant List available from the Fuel Modification Unit.
- Except for dwarf varieties or mature trees small in stature, trees are generally not recommended within Zone A.
- Target species will typically not be allowed within 30 or more feet of combustible structures and may require removal if existing on site.
- Vines and climbing plants shall not be allowed on any combustible structure requiring review.

Zone B — Irrigated Zone

- Extends from the outermost edge of Zone A to 50 feet from structure.
- Irrigation by automatic or manual systems shall be provided to landscaping to maintain healthy vegetation and fire resistance.
- Landscaping and vegetation in this zone shall typically consist primarily of green lawns, ground covers, and adequately spaced shrubs and trees.
- Unless otherwise approved, Ground covers shall be maintained at a height not to exceed 6 inches in Zone A and B. If on a slope 12 inches is acceptable in Zone B within 50 feet of a structure and 18 inches beyond 50 feet. The overall characteristics of the landscape shall provide adequate defensible space in a fire environment. Specimen native plants may be approved to remain if properly maintained for adequate defensible space. Annual grasses and weeds shall be maintained at a height not to exceed 3 inches.
- Plants in Zone B shall typically be fire resistant and spaced appropriately. Species selection should be made referencing the Fuel Modification Plant List. Other species may be utilized subject to approval.
- Vegetation in this zone may consist of modified existing native plants, adequately spaced ornamental shrubs and trees, or both. There may also be replacement landscape planting with ornamental or native species to meet minimum slope coverage requirements of City or County agencies or other Landscape or Hillside ordinances. In all cases the overall characteristics of the landscape shall provide adequate defensible space in a fire environment.
- Target species will typically not be allowed within 30 or more feet of combustible structures and may require removal if existing on site. This distance may extend to 50 feet if the situation dictates.
- Irrigation systems are not required for this zone if it consists entirely of native plants. (Native plants are generally not compatible with regular, un—seasonal supplemental water.)
- All trees, unless otherwise approved, shall be planted far enough from structures and Fire Department accesses as to not overhang any structure or access at maturity.

DIAL BEFORE YOU DIG
1-800-227-2600
DIGALERT
PLAY IT SAFE. DIAL BEFORE YOU DIG!
AT LEAST TWO WORKING DAYS PRIOR TO EXCAVATING
SERVING NINE SOUTHERN CALIFORNIA COUNTIES

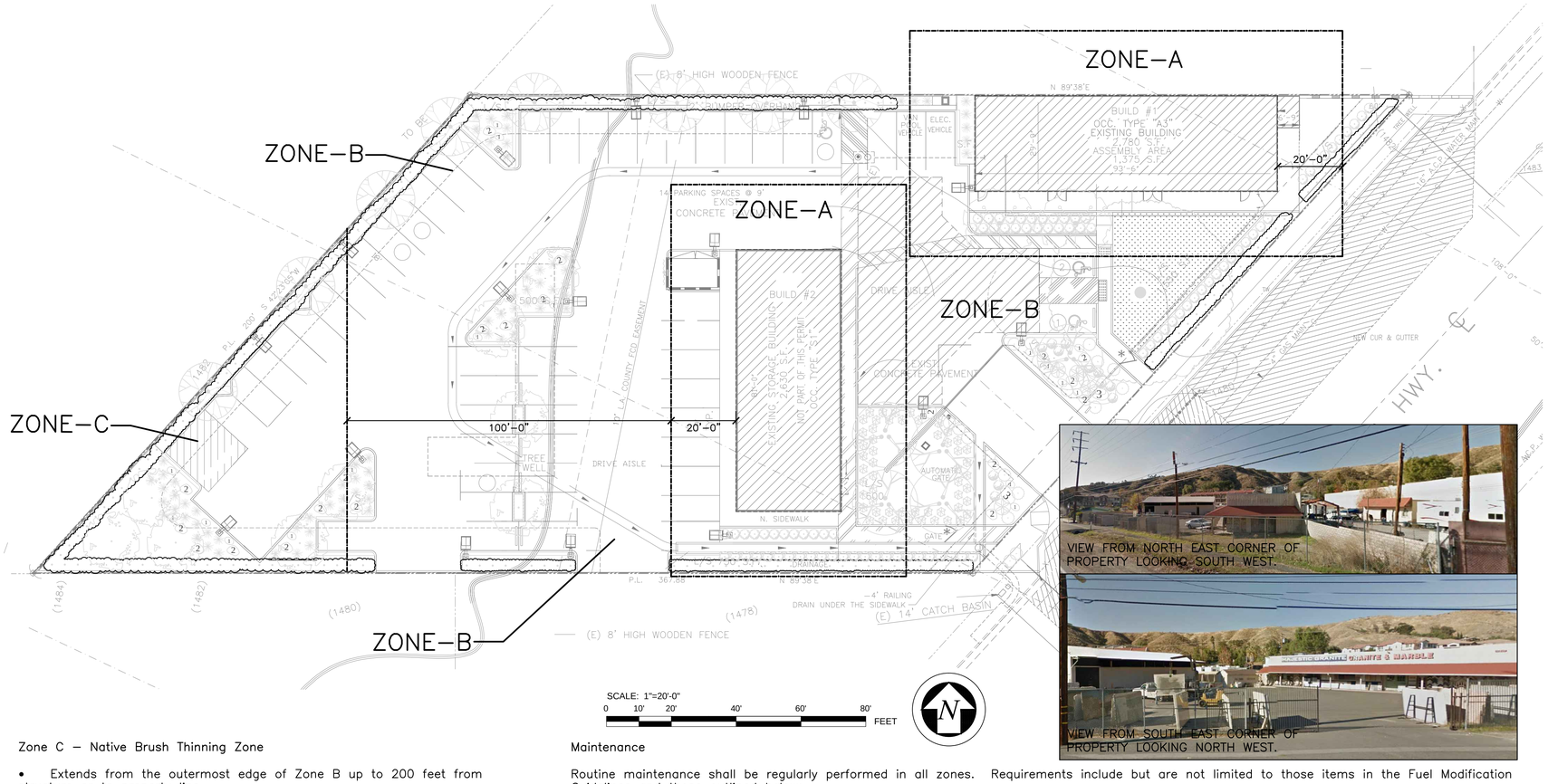

VIEW FROM NORTH EAST CORNER OF PROPERTY LOOKING SOUTH WEST.

VIEW FROM SOUTH EAST CORNER OF PROPERTY LOOKING NORTH WEST.

Zone C — Native Brush Thinning Zone

- Extends from the outermost edge of Zone B up to 200 feet from structure or to property line
- Required thinning and clearance will be determined upon inspection. Required clearance may increase to the maximum allowed by the Fire Code as needed because of vegetation growth.
- Irrigation systems are not required for this zone if it consists entirely of native plants. (Native plants are generally not compatible with regular, un—seasonal supplemental water.)
- Vegetation in this zone may consist of modified existing native plants, adequately spaced ornamental shrubs and trees, or both. There may also be replacement landscape planting with ornamental or native species to meet minimum slope coverage requirements of City or County agencies or other Landscape or Hillside ordinances. In all cases the overall characteristics of the landscape shall provide adequate defensible space in a fire environment
- Plants in Zone C shall be spaced appropriately. Existing native vegetation shall be modified by thinning and removal of those species constituting a fire risk. These species include, but are not limited to chamise, sage, sage brush, and buckwheat.
- Annual grasses and weeds shall be maintained at a height not to exceed 3 inches.
- General spacing for existing native shrubs or groups of shrubs is 15 feet between canopies. Native plants may be thinned by reduced amounts as the distance from development increases.
- General spacing for existing native trees or groups of trees is 30 feet between canopies. This distance may increase or decrease depending on the slope, arrangement of the trees in relation to slope, and the species of tree.

FIRE ACCESS ROAD ZONE

- EXTENDS A MINIMUM OF 10 FEET FROM THE EDGE OF ANY PUBLIC OR PRIVATE ROADWAY THAT MAY BE USED AS ACCESS FOR FIRE—FIGHTING APPARATUS OR RESOURCES.
- CLEAR AND REMOVE FLAMMABLE GROWTH FOR A MINIMUM OF 10 FEET ON EACH SIDE OF FIRE ACCESS ROADS. (FIRE CODE 325.10) ADDITIONAL CLEARANCE BEYOND 10 FEET MAY BE REQUIRED UPON INSPECTION.
- FIRE ACCESS ROADS, DRIVEWAYS AND TURNAROUNDS SHALL BE MAINTAINED IN ACCORDANCE WITH FIRE CODE. FIRE ACCESS ROADS SHALL HAVE UNOBSTRUCTED VERTICAL CLEARANCE FOR A WIDTH OF 20 FEET. (FIRE CODE 503.2.1)
- LANDSCAPING AND NATIVE PLANTS WITHIN THE FIRE ACCESS ROAD ZONE SHALL BE APPROPRIATELY SPACED AND MAINTAINED TO PROVIDE SAFE EGRESS IN WILDLAND FIRE ENVIRONMENTS.
- ALL TREES, UNLESS OTHERWISE APPROVED, SHALL BE PLANTED FAR ENOUGH FROM STRUCTURES AND FIRE DEPARTMENT ACCESSES AS TO NOT OVERHANG ANY STRUCTURE OR ACCESS AT MATURITY.

Maintenance

Routine maintenance shall be regularly performed in all zones. Requirements include but are not limited to those items in the Fuel Modification Guidelines and those outlined below:

- Removal or thinning of undesirable combustible vegetation and removal of dead or dying landscaping to meet minimum brush clearance requirements.
- Pruning and thinning to reduce the overall fuel load and continuity of fuels.
- Fuel loads shall be reduced by pruning lower branches of trees and tree—form shrubs to 1/3 of their height, or 6 feet from lowest hanging branches to the ground, to help prevent fire from spreading and make maintenance easier. Trees with understory plants should be limbed up at least three times the height of the underlying vegetation or up to a height of 40 feet, whichever is less, to help prevent fire from spreading upward into the crown.
- Accumulated plant litter and dead wood shall be removed. Debris and trimmings produced by thinning and pruning should be removed from the site or chipped and evenly dispersed in the same area to a maximum depth of 6 inches.
- All invasive species and their parts should be removed from the site.
- Manual and automatic irrigation systems shall be maintained for operational integrity and programming. Effectiveness should be regularly evaluated to avoid over or under—watering.
- Compliance with the Fire Code is a year—round responsibility. Enforcement will occur following inspection by the Fire Department. Annual inspections for brush clearance code requirements are conducted following the natural drying of grasses and fine fuels, between the months of April and June depending on geographic region. Inspection for compliance with an approved Fuel modification Plan may occur at any time of year.
- Brush Clearance enforcement issues on adjacent properties should be directed to the County of Los Angeles Fire Department's Brush Clearance Unit at (626) 969—2375.
- All future plantings shall be in accordance with the County of Los Angeles Fire Department Fuel Modification Guidelines and approved prior to installation. Changes to the approved plan which require an additional plan review will incur a plan review fee.
- Questions regarding landscape planting and maintenance with regard to fire safety should be directed to the Fire Department's Fuel Modification Unit at (626) 969—5205.

Long Term Maintenance Agreement

The property owner(s) agree to be responsible for the long—term maintenance of this Fuel Modification plan, as described herein. A Covenant & Agreement identifying the applicable Fuel Modification Plan will be recorded on the parcel(s) or CC&R's approved, prior to occupancy being granted. Notification of Fuel Modification requirements is to be made upon sale to new owners. Proposed changes to the Final Fuel Modification plan must be submitted to the Fuel Modification Unit for approval, prior to implementation. Plans will be reviewed based on the current plant list. Regular inspections will be performed by the Fire Department to ensure compliance with the approved plan. Failure to comply with the Fuel Modification Plan requirements may result in an Administrative Fine of at least $500 per violation, as well as possible liens, assessments, and legal action. Violations may also be corrected at the owners expense with the cost placed on the property tax bill with the addition of an Abatement Enforcement Cost of $648.

_____ _____ _____ _____
Name (Print) Signature Date

_____ _____ _____ _____
Name (Print) Signature Date

Approval of this Fuel Modification Plan constitutes approval for only those Codes reviewed as part of the Fuel Modification process and does not replace the needed approval of any other office or agency with jurisdiction and review responsibility for those items which may or may not be illustrated on the plan.

REVISIONS	BY
–	

CHARLES H STRAWTER DESIGN INC.
Landscape Architecture & Urban Design Consulting
Post Office Box 1000, Lancaster, CA 93539
BLA 1 BSA
chardesin@strawterdesign.com
Ph: 661-292-4631 Fax: 661-244-4911
Web: www.strawterdesign.com
CA Registered Prof. Landscape Arch. #3134

SUBMITTAL: AGENCY SUBMITTAL

PROJECT: COMMERCIAL ADDITION
LANDSCAPE & IRRIGATION PLANS

SHEET TITLE: FUEL MODIFICATION PLAN

CLIENT: Al Umma Center of the SC Valley
16927 Sierra Hwy, Santa Clarita, CA 91351

CONTACT: Majuib Elarabi, Tel. (661) 219-3820

LICENSED LANDSCAPE ARCHITECT
CHARLES H. STRAWTER JR.
Signature
6/30/2016
Renewal Date
3791
Date
STATE OF CALIFORNIA

CLARB CERTIFIED LANDSCAPE ARCHITECT

JOB NO.	CSD1184-14
DATE:	01-30-2015
SCALE:	PER PLAN
DRAWN:	CHS
SHEET:	LF-101

08 OF 08 SHEETS